Radio

⇒ Chorus
⇒ Concert
⇒ Symphony
From 2004 m. y.

Main fuse

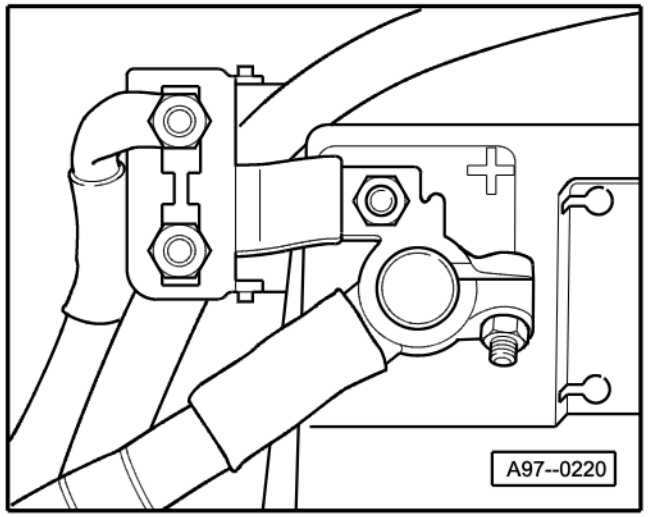

♦ on the Battery

Protected by copyright. Copying for private or commercial purposes, in part or in whole, is not permitted unless authorised by AUDI AG. AUDI AG does not guarantee or accept any liability with respect to the correctness of information in this document. Copyright by AUDI AG.

Fuse holder

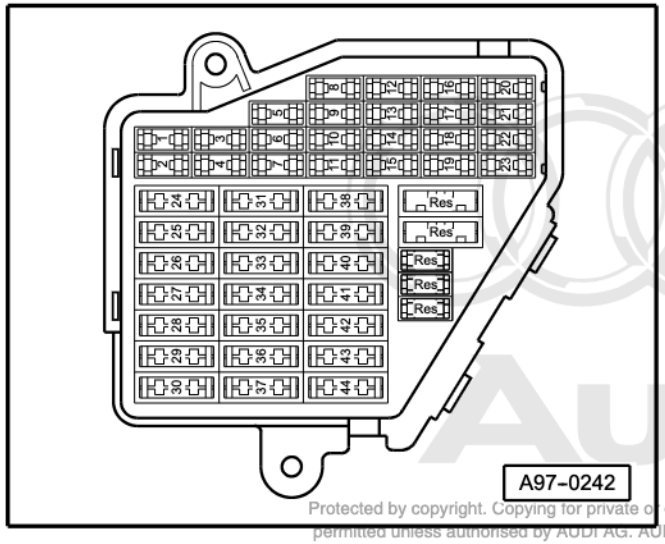

Protected by copyright. Copying for private or commercial purposes, in part or in whole, is not permitted unless authorised by AUDI AG. AUDI AG does not guarantee or accept any liability with respect to the correctness of information in this document. Copyright by AUDI AG.

- Instrument panel driver side

Fuse Colors
30 A - Green
25 A - Withe
20 A - Yellow
15 A - Blue
10 A - Red
7,5 A - Brown
5 A - Beige

Note:

- *Fuse in fusebox from 23 onwards are numbered 223 onwards in Current Flow Diagram.*

Connector station A-pillar

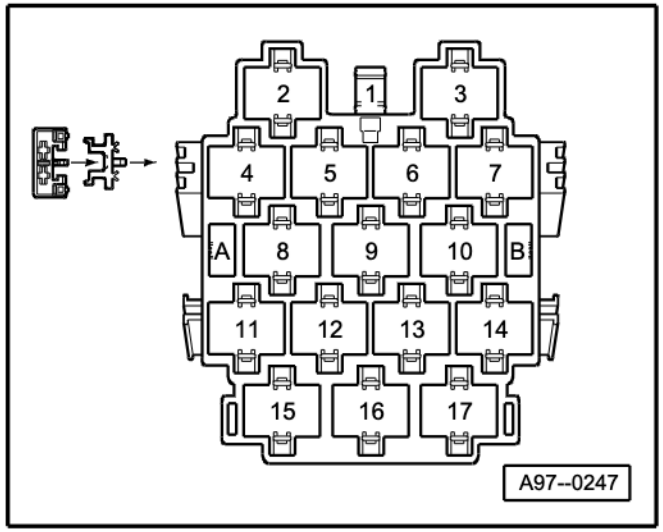

♦ behind side trim, left

9 - 17-Pin Connector, dark brown (T17g)

4-Pin Relay Carrier with threaded connection

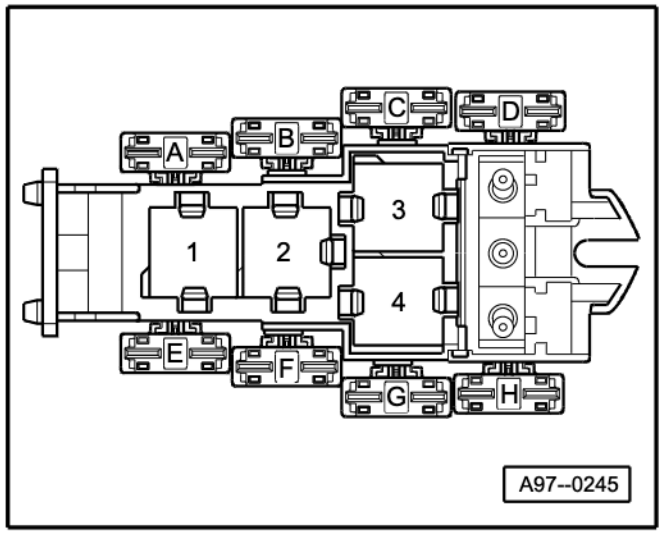

♦ Instrument panel driver side

Protected by copyright. Copying for private or commercial purposes, in part or in whole, is not permitted unless authorised by AUDI AG. AUDI AG does not guarantee or accept any liability with respect to the correctness of information in this document. Copyright by AUDI AG.

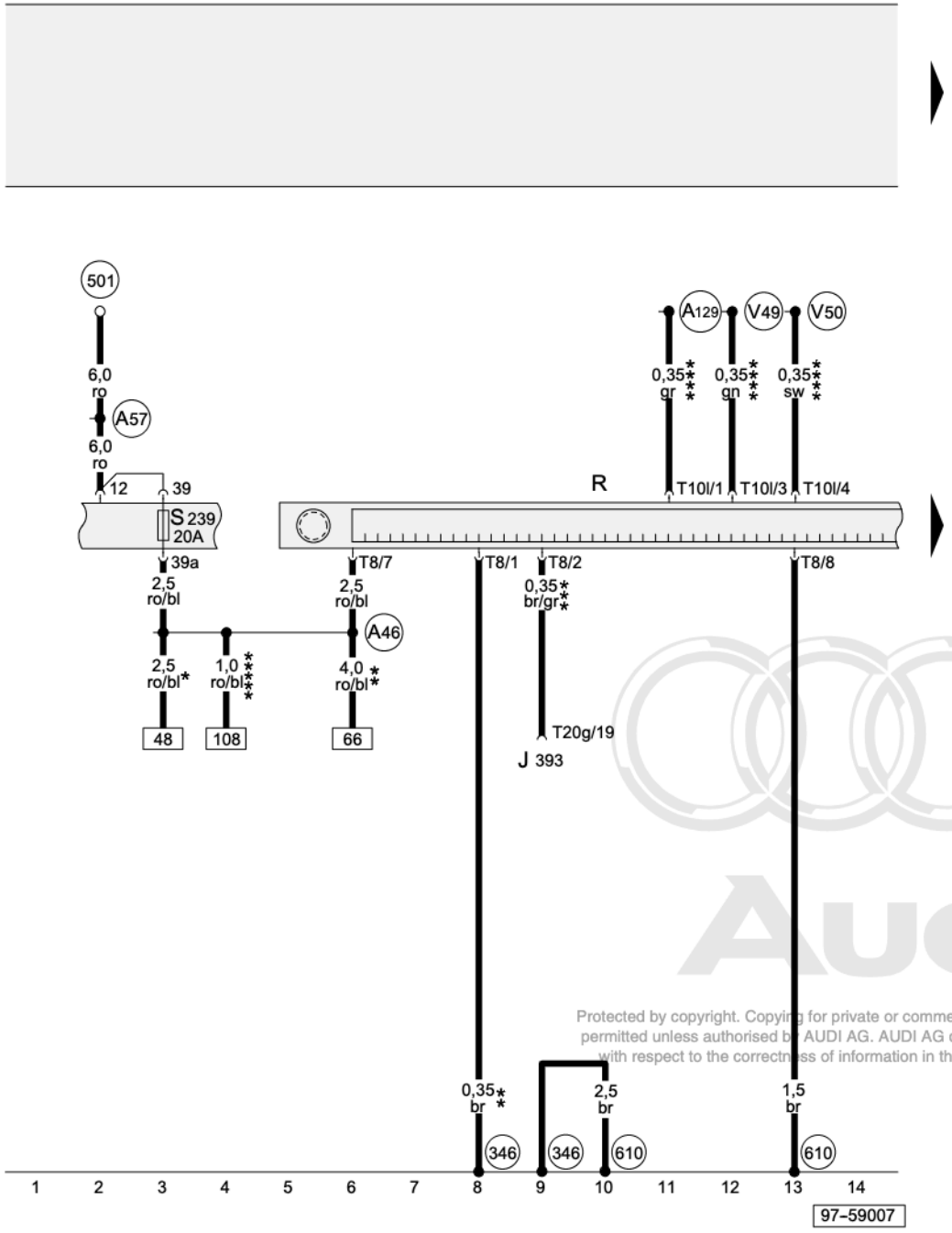

Voltage Supply

J393	Central control module for comfort system
R	Radio
S239	Fuse in fuse holder
T8	8-Pin Connector, black, radio connector III
T10l	10-Pin Connector, red, radio connector IV
T20g	20-Pin Connector, red, on central control module for comfort system (used to be Connector 4)
346	Ground connection (Audio), in instrument panel wiring harness
501	Threaded connection -2- (30), on the relay plate
610	Ground connection (Audio) (under center console, front)
A46	Plus connection (30-from radio), in instrument panel wiring harness
A57	Plus connection -3- (30), in instrument panel wiring harness
A129	Connection (mute), in instrument panel wiring harness
V49	Low Frequency + Connection (in communication wiring harness)
V50	Low Frequency - Connection (in communication wiring harness)
*	with Amplified Speaker only
**	with Bose Speaker only
***	with alarm system only
****	with Telephone only
*****	with Satellite Tuner Radio only

ws	=	white
sw	=	black
ro	=	red
br	=	brown
gn	=	green
bl	=	blue
gr	=	grey
li	=	lilac
ge	=	yellow
or	=	orange
rs	=	pink

Protected by copyright. Copying for private or commercial purposes, in part or in whole, is not permitted unless authorised by AUDI AG. AUDI AG does not guarantee or accept any liability with respect to the correctness of information in this document. Copyright by AUDI AG.

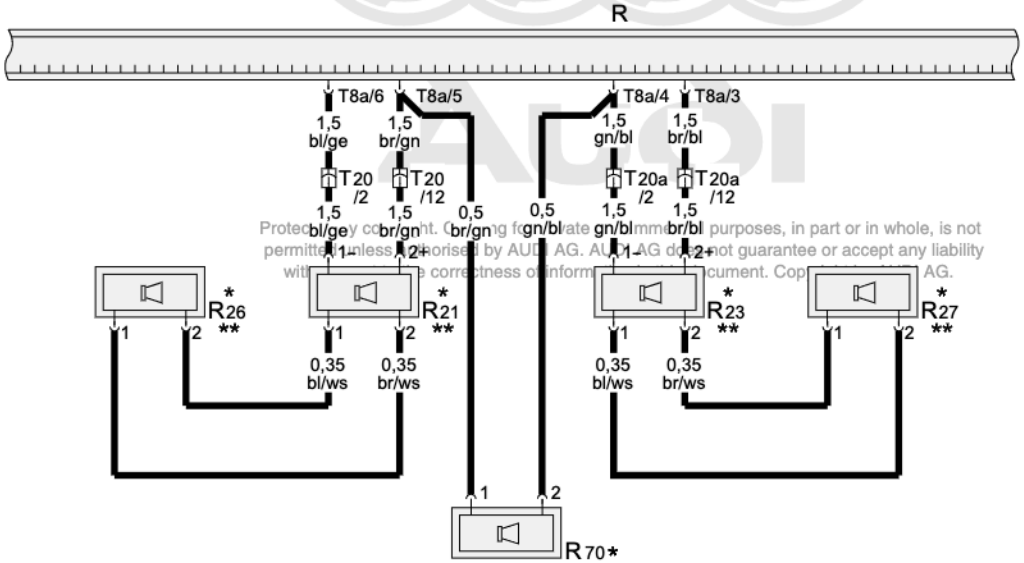

Protected by copyright. Copying for private or commercial purposes, in part or in whole, is not permitted unless authorised by AUDI AG. AUDI AG does not guarantee or accept any liability with respect to the correctness of information in this document. Copyright by AUDI AG.

15 16 17 18 19 20 21 22 23 24 25 26 27 28

8E0-036040406

Speaker front

R	Radio
R21	Bass speaker, left front
R23	Bass speaker, right front
R26	Left Front Midrange Speaker
R27	Right Front Midrange Speaker
R70	Inside loudspeaker (Center Speaker)
T8a	8-Pin Connector, brown, radio connector II
T20	20-Pin Connector, black, door A-pillar, left
T20a	20-Pin Connector, black, door A-pillar, right
*	with Amplified Speaker only
**	with Passiv Speaker only

ws	=	white
sw	=	black
ro	=	red
br	=	brown
gn	=	green
bl	=	blue
gr	=	grey
li	=	lilac
ge	=	yellow
or	=	orange
rs	=	pink

Speaker rear

R	Radio
R15	Bass speaker, left rear
R17	Bass speaker, right rear
R34	Left Rear Midrange Speaker
R35	Right Rear Midrange Speaker
T8a	8-Pin Connector, brown, radio connector II
T20b	20-Pin Connector, black, door B-pillar, left
T20c	20-Pin Connector, black, door B-pillar, right
*	with Passiv Speaker only

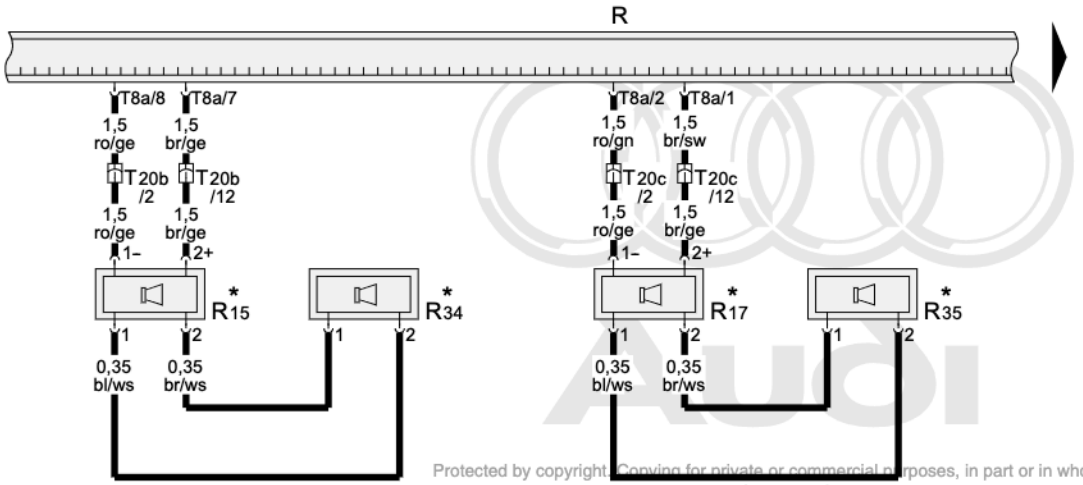

Protected by copyright. Copying for private or commercial purposes, in part or in whole, is not permitted unless authorised by AUDI AG. AUDI AG does not guarantee or accept any liability with respect to the correctness of information in this document. Copyright by AUDI AG.

ws	=	white
sw	=	black
ro	=	red
br	=	brown
gn	=	green
bl	=	blue
gr	=	grey
li	=	lilac
ge	=	yellow
or	=	orange
rs	=	pink

29 30 31 32 33 34 35 36 37 38 39 40 41 42

8E0-036050406

Protected by copyright. Copying for private or commercial purposes, in part or in whole, is not permitted unless authorised by AUDI AG. AUDI AG does not guarantee or accept any liability with respect to the correctness of information in this document. Copyright by AUDI AG.

Amplified Speaker rear

R	Radio
R12	Amplifier
R15	Bass speaker, left rear
R17	Bass speaker, right rear
R34	Left Rear Midrange Speaker
R35	Right Rear Midrange Speaker
R100	Bass loudspeaker
T20b	20-Pin Connector, black, door B-pillar, left
T20c	20-Pin Connector, black, door B-pillar, right
T20d	20-Pin Connector, black, radio connector I
346	Ground connection (Audio), in instrument panel wiring harness
*	with Amplified Speaker only

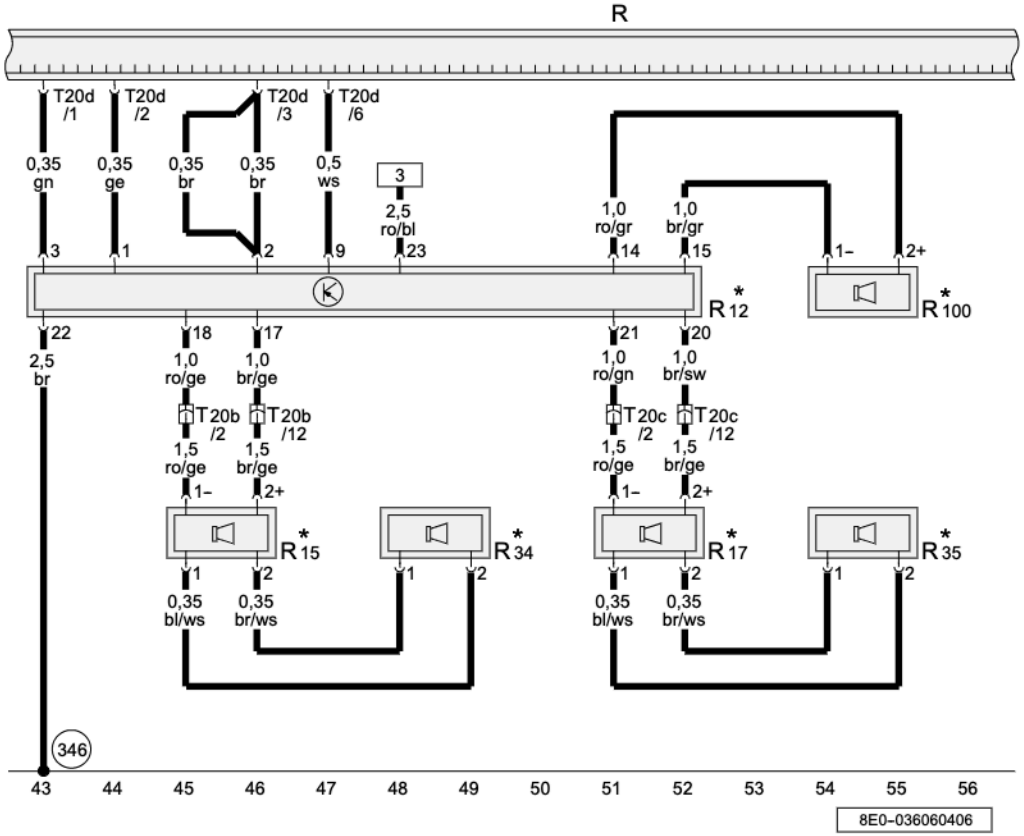

ws	=	white
sw	=	black
ro	=	red
br	=	brown
gn	=	green
bl	=	blue
gr	=	grey
li	=	lilac
ge	=	yellow
or	=	orange
rs	=	pink

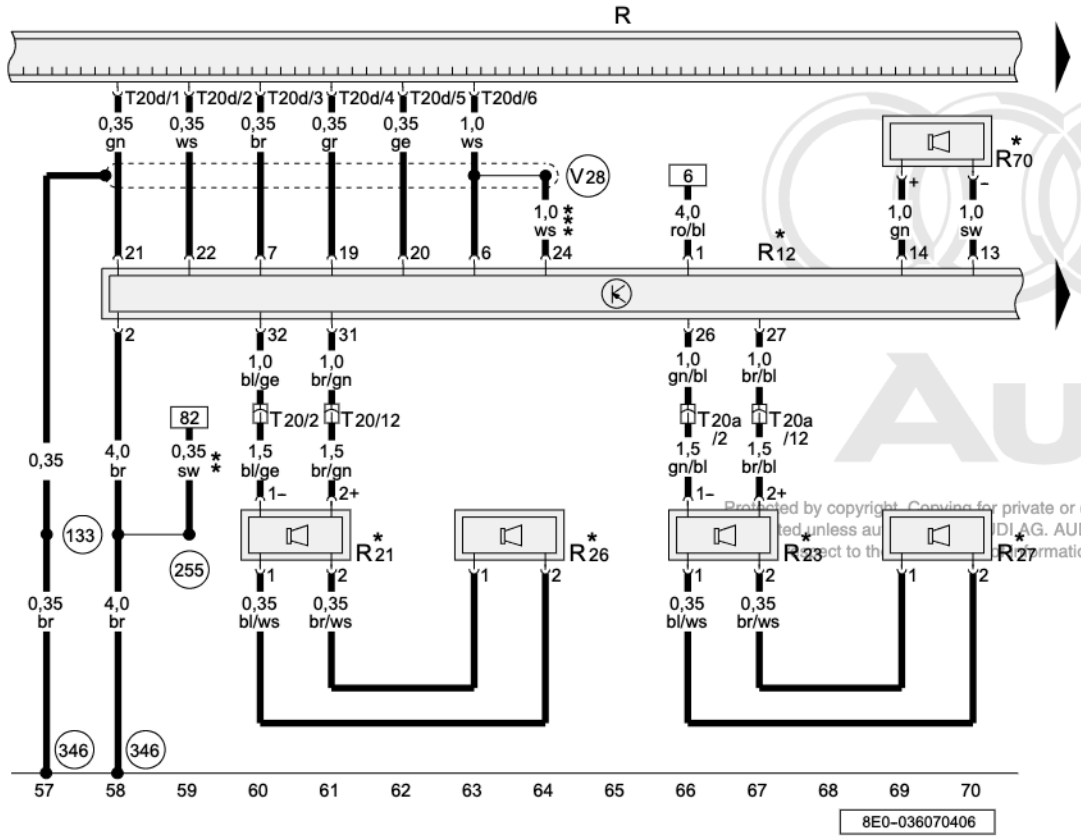

Bose Speaker front

R	Radio
R12	Amplifier
R21	Bass speaker, left front
R23	Bass speaker, right front
R26	Left Front Midrange Speaker
R27	Right Front Midrange Speaker
R70	Inside loudspeaker (Center Speaker)
T20	20-Pin Connector, black, door A-pillar, left
T20a	20-Pin Connector, black, door A-pillar, right
T20d	20-Pin Connector, black, radio connector I
133	Ground connection, in speaker wiring harness
255	Ground connection, -1-, in wiring harness Radio
346	Ground connection (Audio), in instrument panel wiring harness
V28	Connector -1-, in radio wiring harness
*	with Bose Speaker only
**	from November 2003
***	up to October 2003

Protected by copyright. Copying for private or commercial purposes, in part or in whole, is not permitted unless authorised by AUDI AG. AUDI AG does not guarantee or accept any liability with respect to the correctness of information in this document. Copyright by AUDI AG.

ws	=	white
sw	=	black
ro	=	red
br	=	brown
gn	=	green
bl	=	blue
gr	=	grey
li	=	lilac
ge	=	yellow
or	=	orange
rs	=	pink

Bose Speaker rear, Inside microphone

R	Radio
R12	Amplifier
R15	Bass speaker, left rear
R17	Bass speaker, right rear
R34	Left Rear Midrange Speaker
R35	Right Rear Midrange Speaker
R74	Inside microphone
R100	Bass loudspeaker
T17g	17-Pin Connector, dark brown, connector station A-pillar, left
T20b	20-Pin Connector, black, door B-pillar, left
T20c	20-Pin Connector, black, door B-pillar, right
*	with Bose Speaker only
**	from November 2003

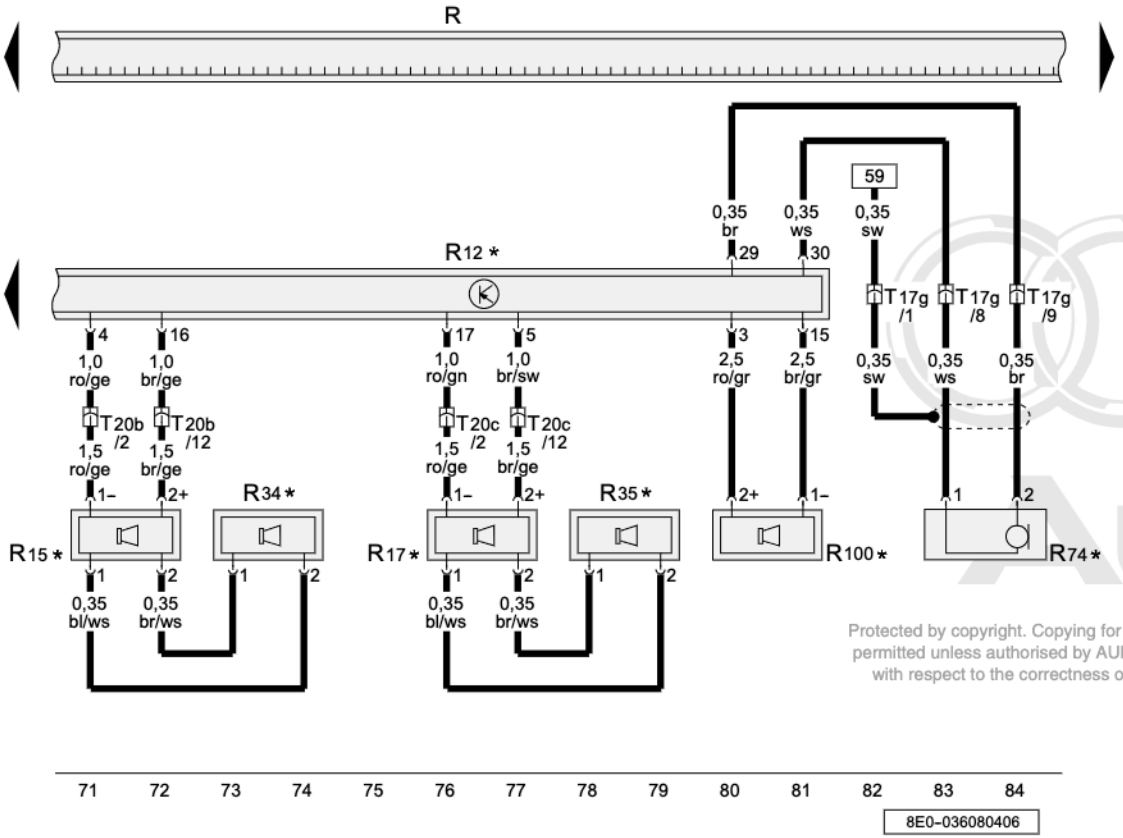

ws	=	white
sw	=	black
ro	=	red
br	=	brown
gn	=	green
bl	=	blue
gr	=	grey
li	=	lilac
ge	=	yellow
or	=	orange
rs	=	pink

Protected by copyright. Copying for private or commercial purposes, in part or in whole, is not permitted unless authorised by AUDI AG. AUDI AG does not guarantee or accept any liability with respect to the correctness of information in this document. Copyright by AUDI AG.

CD Changer Unit

R	Radio
R41	CD Changer Unit
T20d	20-Pin Connector, black, radio connector I
*	with CD-changer Unit only (Chorus, Concert)

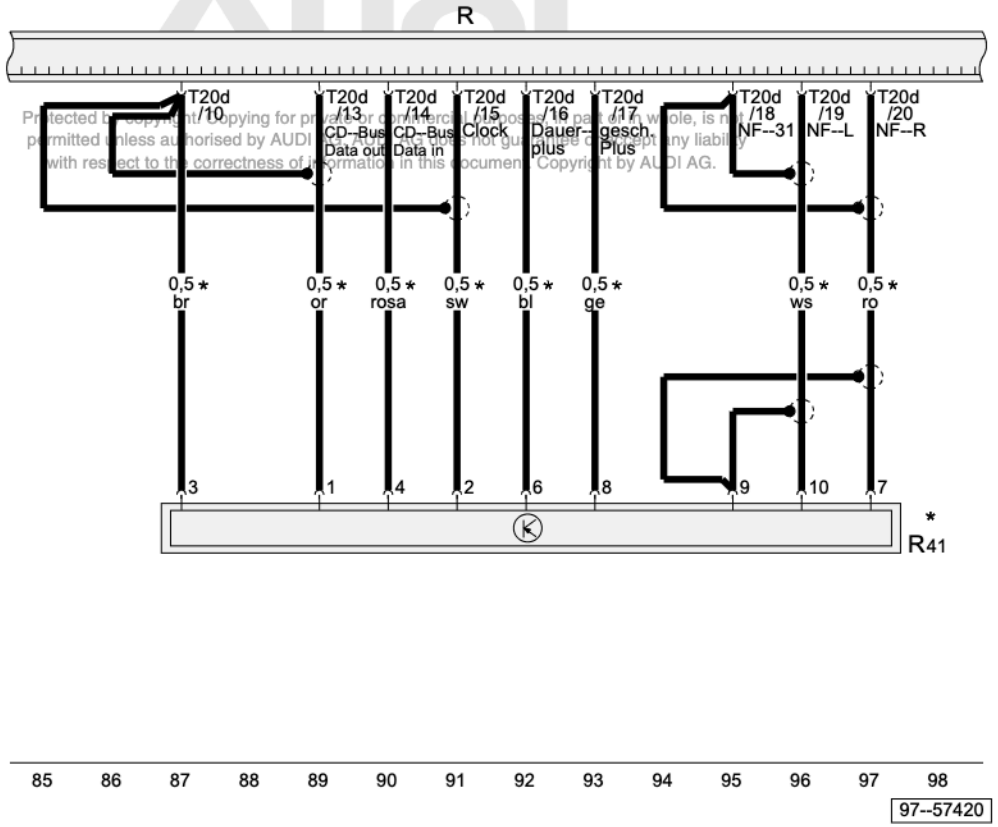

Protected by copyright. Copying for private or commercial purposes, in part or in whole, is not permitted unless authorised by AUDI AG. AUDI AG does not guarantee or accept any liability with respect to the correctness of information in this document. Copyright by AUDI AG.

ws	=	white
sw	=	black
ro	=	red
br	=	brown
gn	=	green
bl	=	blue
gr	=	grey
li	=	lilac
ge	=	yellow
or	=	orange
rs	=	pink

CD Changer Unit, Satellite Radio, Satellite Antenna

R	Radio
R41	CD Changer Unit
R146	Satellite Radio
R170	Satellite Antenna
R172	Satellite Tuner Antenna
T8o	8-Pin Connector, black, on Satellite Radio
T20d	20-Pin Connector, black, radio connector I
310	Ground Connection 2 (shielding) (in CD changer wiring harness)
346	Ground Connection (Audio)(in instrument panel wiring harness)
V14	wire connection (shielding), in CD-changer wiring harness
*	without CD-changer Unit (Symphony) only
**	with CD-changer Unit (Symphony) and Satellite Tuner Radio only
***	with Satellite Tuner Radio only
****	Antenna for Sedan

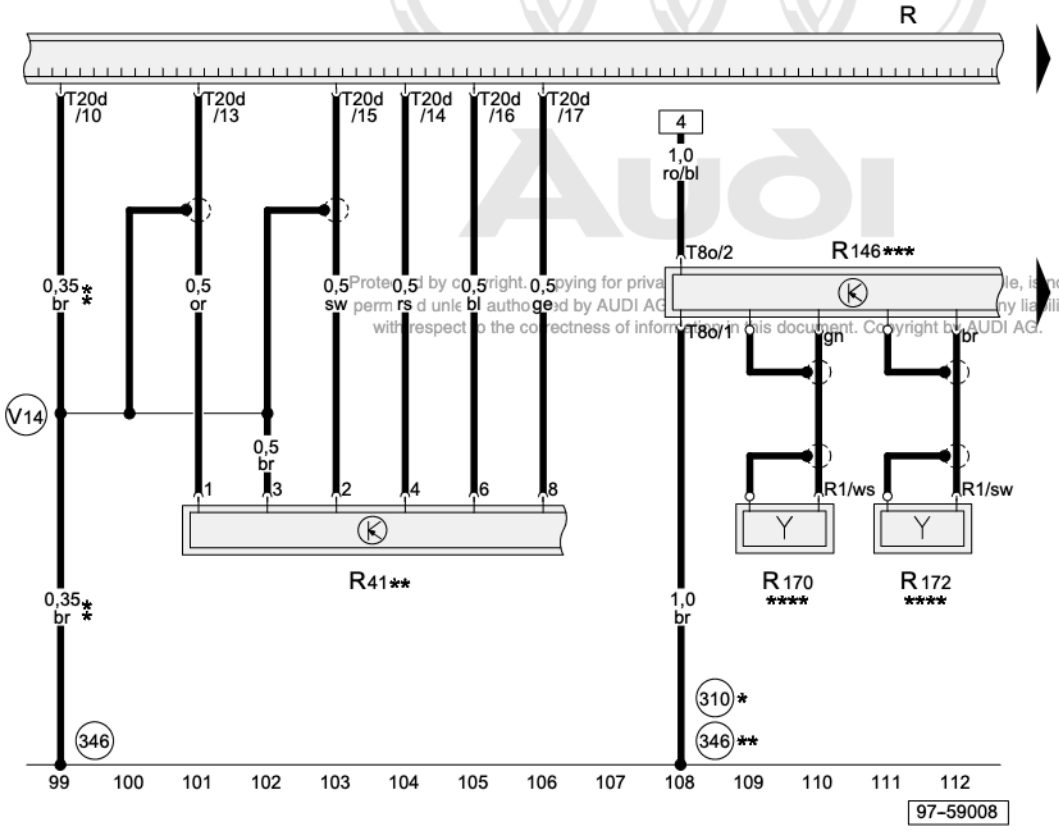

ws	=	white
sw	=	black
ro	=	red
br	=	brown
gn	=	green
bl	=	blue
gr	=	grey
li	=	lilac
ge	=	yellow
or	=	orange
rs	=	pink

Protected by copyright. Copying for private or commercial purposes, in part or in whole, is not permitted unless authorised by AUDI AG. AUDI AG does not guarantee or assume any liability with respect to the correctness of information in this document. Copyright by AUDI AG.

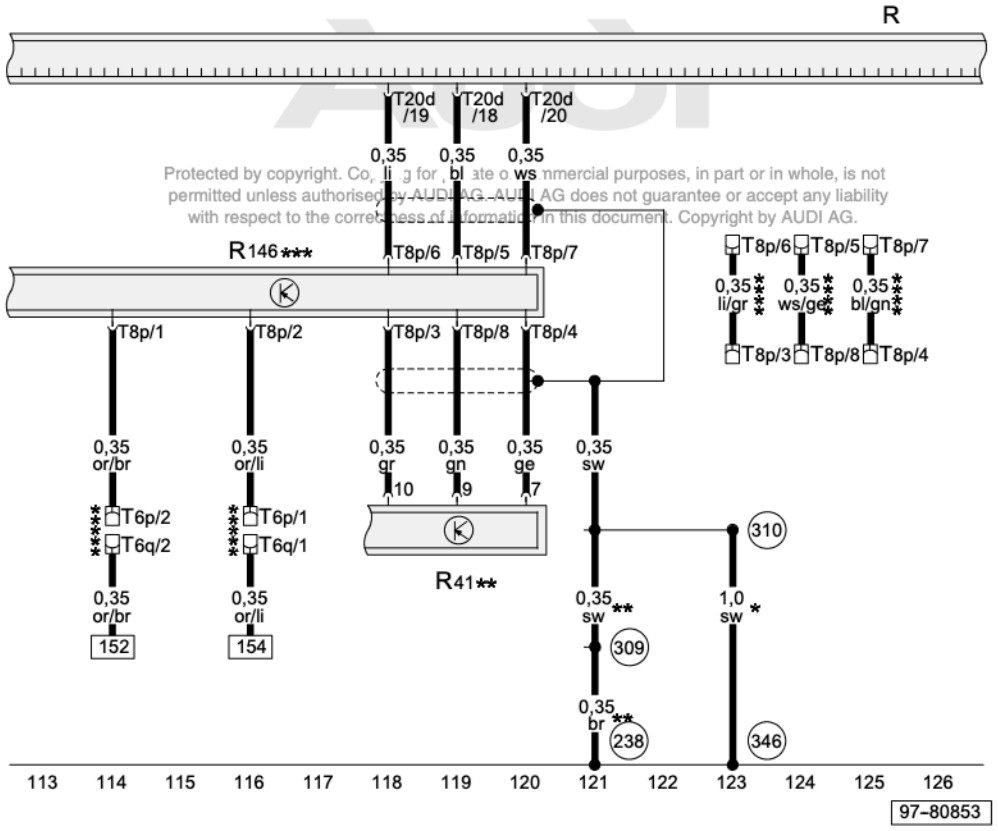

Protected by copyright. Copying for private or commercial purposes, in part or in whole, is not permitted unless authorised by AUDI AG. AUDI AG does not guarantee or accept any liability with respect to the correctness of information in this document. Copyright by AUDI AG.

CD Changer Unit, Satellite Radio

R	Radio
R41	CD Changer Unit
R146	Satellite Radio
T6p	6-Pin Connector, lilac, connector station A-pillar, right
T6q	6-Pin Connector, lilac, connector station A-pillar, right
T8p	8-Pin Connector, black, on Satellite Radio
T20d	20-Pin Connector, black, radio connector I
238	Ground connection -1-, in wiring harness interior
309	Ground Connection 1 (shielding) (in CD changer wiring harness)
310	Ground Connection 2 (shielding) (in CD changer wiring harness)
346	Ground Connection (Audio)(in instrument panel wiring harness)
Q	without CD-changer Unit (Symphony) only
QQ	with CD-changer Unit (Symphony) and Satellite Radio only
QQQ	with Satellite Radio only
QQQQ	Connector bridge for CD-changer Unit (Symphony) without Satellite Radio only
QQQQQ	T6p and T6q must be connected during Satellite Radio installation

ws	=	white
sw	=	black
ro	=	red
br	=	brown
gn	=	green
bl	=	blue
gr	=	grey
li	=	lilac
ge	=	yellow
or	=	orange
rs	=	pink

Antenna Avant

J393	Comfort System Central Control Module
R	Radio
R1	Antenna Connection
R64	Auxiliary Heater Radio Receiver
R108	Left Antenna Module
T16i	16-Pin Connector, brown, on central control module for comfort system (used to be Connector 5)
Z24	Rear Window Defogger With Window Antenna
Q	with Radio concert or symphony only
QQ	with Radio chorus only, from 2004 m. y.
QQQ	Antenna on right rear side window
QQQQ	not applicable to US/CDN
QQQQQ	Antenna on left rear side window

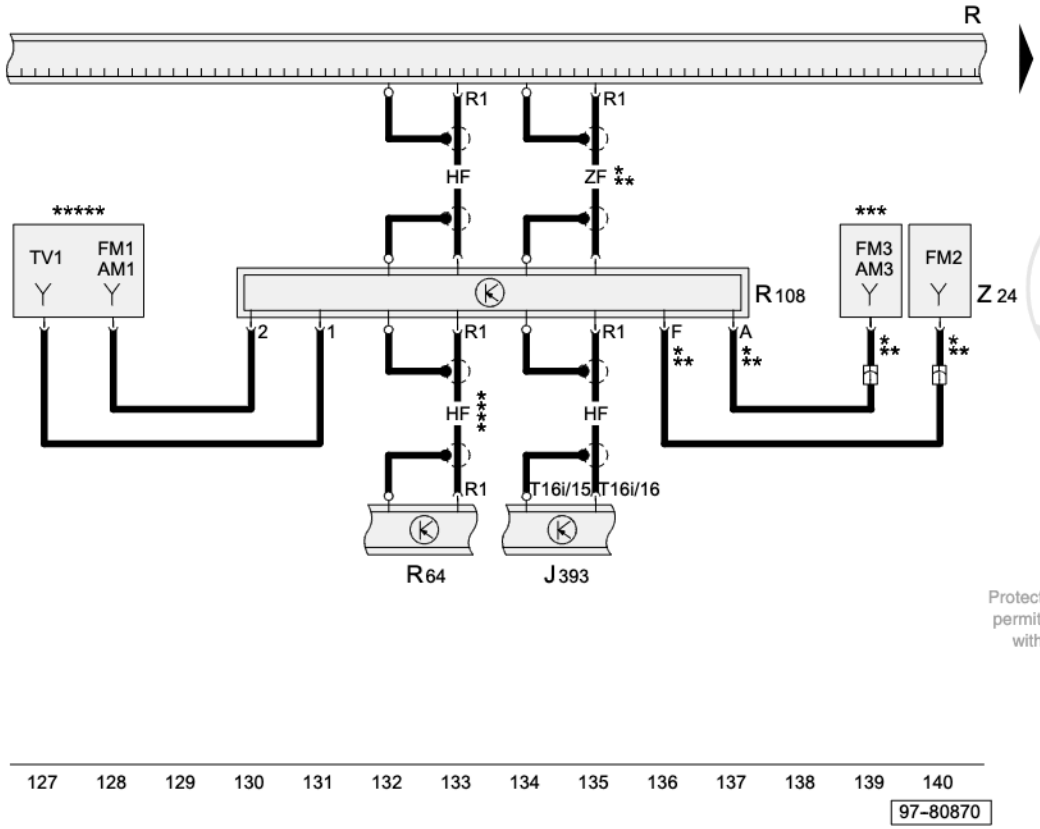

ws	=	white
sw	=	black
ro	=	red
br	=	brown
gn	=	green
bl	=	blue
gr	=	grey
li	=	lilac
ge	=	yellow
or	=	orange
rs	=	pink

Protected by copyright. Copying for private or commercial purposes, in part or in whole, is not permitted unless authorised by AUDI AG. AUDI AG does not guarantee or accept any liability with respect to the correctness of information in this document. Copyright by AUDI AG.

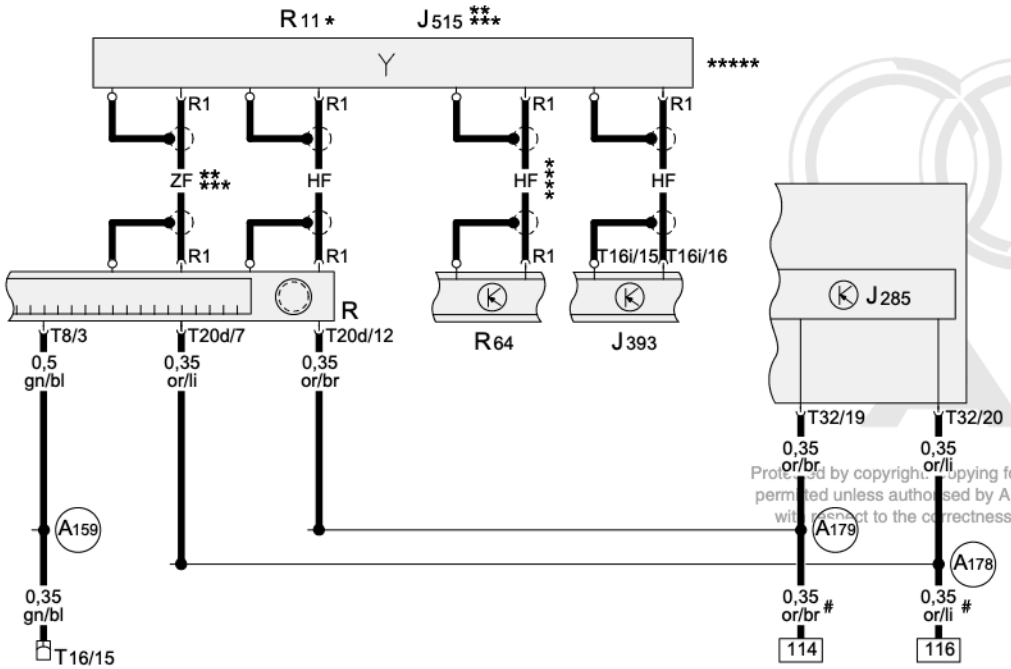

Protected by copyright. Copying for private or commercial purposes, in part or in whole, is not permitted unless authorised by AUDI AG. AUDI AG does not guarantee or accept any liability with respect to the correctness of information in this document. Copyright by AUDI AG.

Antenna Sedan, diagnostic connection, CAN-Bus

J285	Control module with indicator unit in instrument panel insert
J393	Comfort System Central Control Module
J515	Antenna Selection Control Module
R	Radio
R1	Antenna Connection
R11	Antenna
R64	Auxiliary Heater Radio Receiver
T8	8-Pin Connector, black, radio connector III
T16	16-Pin Connector, black, diagnostic connection
T16i	16-Pin Connector, brown, on central control module for comfort system (used to be Connector 5)
T20d	20-Pin Connector, black, radio connector I
T32	32-Pin Connector, blue, on instrument panel insert
A159	Wire connection (L), in instrument panel wiring harness
A178	Infotainment High-bus Connection (in instrument panel wiring harness)
A179	Infotainment Low-bus Connection (in instrument panel wiring harness)
Q	with Radio chorus only
QQ	with Radio concert or symphony only
QQQ	with Radio chorus only, from 2004 m. y.
QQQQ	not applicable to US/CDN
QQQQQ	Antenna for Sedan
#	with Satellite Radio only

ws	=	white
sw	=	black
ro	=	red
br	=	brown
gn	=	green
bl	=	blue
gr	=	grey
li	=	lilac
ge	=	yellow
or	=	orange
rs	=	pink

141 142 143 144 145 146 147 148 149 150 151 152 153 154

97-80854